WAGNER DIAPHRAGM UNITS F350 Hydraulics

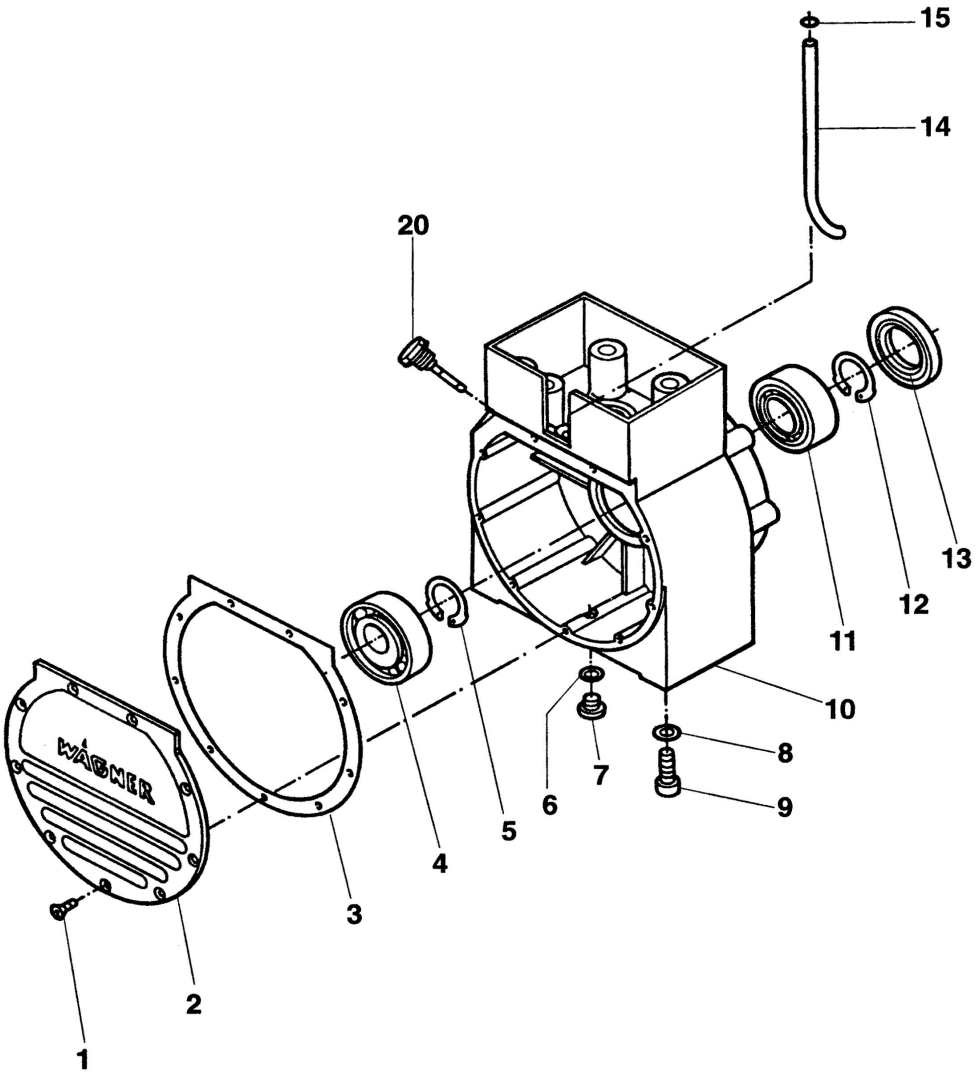

Item	Part No:	Description	Item	Part No:	Description
1	9903204	Screw M4 x 12 (9)	9	9900313	Head Stud M8 x 25 (2)
2	8197140	Front Cover	10	0252300	Housing
3	0252305	Seal	11	9960401	Roller Bearing NU 2205 E
4	9960429	Roller	12	9922603	Snap Ring 52 x 2 DIN472
5	9922506	Snap Ring 25 x 1.2 DIN471	13	9970503	Shaft Seal A 32 x 52 x 7
6	9970127	Seal Ring A 10 x 13.5 x 1	14	0252316	Return Pipe
7	9904306	Screw Plug BSP 1/8	15	0089934	O'Ring 5.28 x 2.62
8	9921501	Spring Washer A 8 (2)	20	0252203	Oil Dipstick